Demonstration of channel-spacing-tunable demultiplexing of optical orthogonal-frequency-division-multiplexed subcarriers utilizing reconfigurable all-optical discrete Fourier transform

Mohammad Reza Chitgarha,[1,*] Salman Khaleghi,[1] Omer F. Yilmaz,[1] Moshe Tur,[2] Michael W. Haney,[3] Carsten Langrock,[4] Martin M. Fejer,[4] and Alan E. Willner[1]

[1]*Department of Electrical Engineering, University of Southern California, Los Angeles, California 90089, USA*

[2]*School of Electrical Engineering, Tel Aviv University, Ramat Aviv 69978, Israel*

[3]*Department of Electrical and Computer Engineering, University of Delaware, Newark, Delaware 19716, USA*

[4]*Edward L. Ginzton Laboratory, Stanford University, Stanford, California 94305, USA*

**Corresponding author: chitgarh@usc.edu*

Received June 12, 2012; accepted July 14, 2012;
posted August 21, 2012 (Doc. ID 170371); published September 19, 2012

We experimentally demonstrate a tunable and reconfigurable optical discrete Fourier transform (DFT) to demultiplex orthogonal-frequency-division-multiplexed subcarriers with 2/3/4 subcarriers at 20/40 GHz frequency spacing. An average power penalty of ~5 dB (~3.5) at bit error ratio of 10^{-9} is achieved for 4×20 Gbit/s (4×10 Gbit/s) OFDM signal with 20 GHz frequency spacing. © 2012 Optical Society of America

OCIS codes: 060.2360, 060.4370, 190.4223.

The field of high-data-rate signal processing relies heavily on the use of discrete Fourier transform (DFT) as a powerful tool [1]. N-point DFT transforms a time-domain sequence of length N to another sequence in the frequency domain with the same length, which can be a computational basis for spectral analysis in many signal-processing applications.

As an application, optical DFT can be used to demultiplex optical orthogonal-frequency-division-multiplexed (OFDM) signal to its constituent subcarriers [2]. In OFDM, lower-bit-rate subcarriers are encoded into a higher line-rate data stream. OFDM has captured a significant amount of interest in optical communication due to the relative tolerance to fiber-based impairments as well as the compact optical spectrum [3,4]. As with many other types of optical data traffic in a transparent network, there is also the future potential for efficiently demultiplexing/multiplexing or adding/dropping individual "channels," i.e., subcarriers, at a given reconfigurable network node. Optical implementations of the DFT to extract the individual OFDM subcarriers include using cascaded Mach–Zehnder interferometers [5,6], and arrayed waveguide gratings [7], which tend not to be readily tunable for accommodating different channel spacing and number of subcarriers.

In this Letter, we experimentally demonstrate the performance of our proposed DFT configuration by demultiplexing of optical OFDM signal with arbitrary number of subchannels and variable channel spacing [8]. Optical OFDM is generated by modulating odd and even subchannels of an optical comb separately [6]. The multitap DFT for demultiplexing of the OFDM signal is demonstrated by implementing an all-optical serial-to-parallel converter using tunable dispersion/conversion delays [9], utilizing a spatial light modulator (SLM) to multiply time-domain samples by their corresponding coefficients and realizing coherent multiplexing using $\chi^{(2)}$ nonlinear processes in the periodically poled lithium niobate (PPLN) waveguide [10]. Since the DFT delays and coefficients can be tuned continuously, the proposed configuration is capable of baud-rate-variable and channel-spacing-tunable demultiplexing of OFDM subcarriers. We demonstrated 2-, 3-, and 4-point DFT with 20 GHz and 40 GHz channel spacing. OFDM, 20 Gb/s, and 40 Gb/s non-return-to-zero differential phase shift keying (NRZ-DPSK) subcarriers are successfully demultiplexed using our proposed DFT scheme. For demultiplexing of the four subcarrier 20 Gbit/s OFDM (80 Gbits/s), an average power penalty of ~5 dB is achieved at bit error ratio (BER) of 10^{-9}.

An optically generated OFDM signal with N subcarriers can be represented by

$$s(t) = \sum_{n=0}^{N-1} x_n(t) e^{j2\pi n \Delta f t}, \tag{1}$$

in which f_0, Δf, and $x_n(t)$ are optical carrier frequency, optical frequency spacing, and nth subcarrier signal, respectively [4]. Optical N-point DFT can extract the nth subcarrier signal from $s(t)$, according to

$$x_n(t) = \sum_{k=0}^{N-1} s\left(t + \frac{k}{\Delta f \times N}\right) e^{j2\pi nk/\mathrm{N}}. \tag{2}$$

After sampling $y_n(t)$ at $t = m/\Delta f$, x_n can be obtained.

The principle of operation of our proposed optical DFT is depicted in Fig. 1. At the first stage, the original OFDM signal along with N dummy pump lasers (λ_{Dk}) and a continuous wave (CW) pump (λ_{p1}) is injected into a PPLN waveguide with quasi-phase matching (QPM) wavelength of λ_{QPM}. Due to cascaded $\chi^{(2)}{:}{:}\chi^{(2)}$ processes of sum frequency generation (SFG) and difference frequency generation (DFG), the PPLN waveguide fans out N replicas of the data signal, with each replica located on a

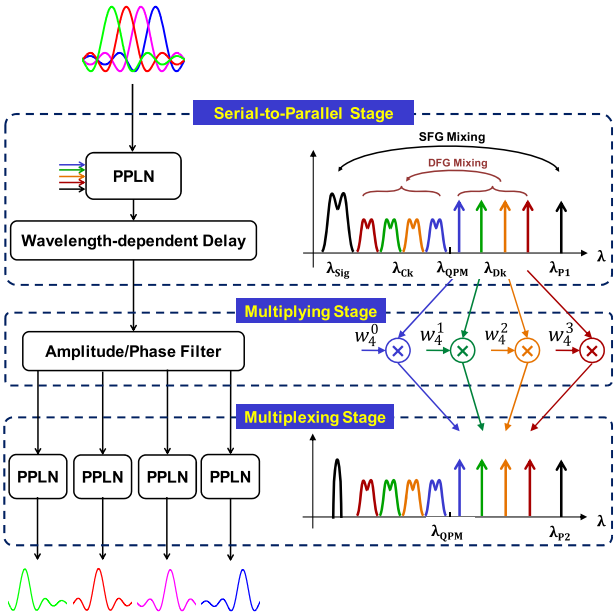

Fig. 1. (Color online) Conceptual block diagram of a reconfiguable optical DFT.

different wavelength (λ_{Ck}). Subsequently, these replicas are sent through a chromatic dispersive element to induce wavelength-dependent delays on the signal copies. The relative delay between two adjacent replicas can be obtained by $\tau = D \times \Delta\lambda$, where D is the dispersion parameter and $\Delta\lambda$ is the wavelength separation between two replicas. Consequently, by setting $\tau = 1/(N \times \Delta f)$, the serial-to-parallel stage of DFT is realized, and the signal replica located at λ_{Dk} is proportional to the kth sample of input signal (i.e., $s(t + k/(N \times \Delta f))$). The channel spacing can thus be continuously tuned by varying the dummy pump wavelengths. At the multiplying stage, all copies and dummy pumps are filtered altogether and split into N paths for extracting N subcarriers. In each path, the dummy pumps are weighted according to DFT formula (2). A liquid crystal on silicon (LCoS) filter can be utilized to write complex weights on dummy pumps and/or signal replicas since it can vary both amplitude and phase of optical spectrum of the given signal. In order to extract the nth subcarrier, the phases of the dummy pumps need to be adjusted to $0, 2\pi n/N, \ldots, 2\pi n(N-1)/N$, respectively, in the nth path. These phases are inversely proportional to the DFT length. At the last stage, in each path, another PPLN waveguide is used to multiplex the weighted replicas coherently on a single wavelength. To do so, another CW pump laser is also injected to the PPLN waveguide with the same QPM wavelength (λ_{QPM}). In this stage, the dummy pumps are reused for the SFG mixing followed by DFG mixing using the new CW pump laser. Thus, the mixing products of signal replicas and their corresponding dummy pumps are added coherently. The output of the nth path can be sampled at $t = 0, 1/\Delta f, 2/\Delta f, \ldots$ either electrically or optically to obtain the nth subcarrier. Therefore, all subcarriers can be extracted by using the proposed DFT scheme. The advantage of this scheme is that by using an $N+1$ nonlinear element—which can be potentially integrated on the same waveguide—multiple arithmetic operations required for DFT (i.e., multiplications and additions) can be done simultaneously, in a real-time fashion and at high speed. Additionally, since the delays and phases are tunable, the same scheme can be potentially reconfigured to accommodate DFT with arbitrary size and variable channel spacing.

The experimental setup for the tunable DFT module to extract one subcarrier is shown in Fig. 2. The 20/40 GHz frequency spacing optical comb for OFDM signal is generated using a phase modulator driven by an electrical clock signal at 20/40 GHz. The generated optical comb is filtered deinterleaved to odd and even OFDM subcarriers using a wavelength-selective switch (Finisar's Waveshaper 4000E). The even subcarriers are modulated together to a 10 and 20 Gb/s NRZ-DPSK signal using the MZM modulator (SHF transmitter 11100A), and the odd subcarriers are modulated using a phase modulator driven with an electrical signal with peak-to-peak voltage of $V\pi$. Pseudo-random bit sequence (PRBS) $2^{31} - 1$ is used for both transmitters. The data streams in the two paths are then manually synchronized using tunable optical delay lines, combined in a coupler, amplified, and filtered to generate the OFDM input signal at $\lambda_{\mathrm{Sig}} \sim 1541.7$ nm. The OFDM signal is amplified to 300 mW, coupled together with another amplified (300 mW) CW pump ($\lambda_{p1} \sim$ 1561.7 nm) and two/three/four CW lasers ($\lambda_{D1\text{–}4}$) as the dummy pumps and sent into the PPLN waveguide. The PPLN has a QPM wavelength of ~1551.7 nm and generated copies of the signal by cascaded SFG followed by DFG. The output of the first PPLN passes through the waveshaper in order to filter the signal copies as well as their dummy pumps and apply the phases on the pumps for the DFT operation. Instead of using the LCoS filter for applying the DFT phases on the pumps, we can also adjust the phases by fine-tuning the wavelength of each dummy pump, which induces negligible delay due to dispersion and enough phase shifts for DFT. A relative delay is introduced on the copies by sending the resulting signals and pumps through a ~90 m DCF spool. Using ~1.6 nm wavelength separation, this induces ~12.5 ps delay (quarter a bit at 20 Gbit/s). In the last stage, we use another PPLN with almost the same QPM wavelength and another CW pump λ_{p2} to coherently multiplex the delayed and phase adjusted copies back on the same wavelength and sent to the preamplified receiver in order to perform BER measurement. In the receiver, the

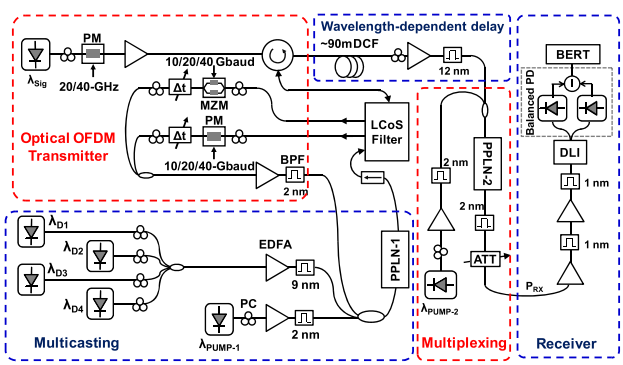

PM: Phase Modulator
MZM: Mach-Zender Modulator
DCF: Dispersion compensating fiber
PC: Polarization controller
DLI: Delay Line Interferometer
BPF: Bandpass Filter

Fig. 2. (Color online) (a) Experimental setup for proposed optical DFT to demultiplex OFDM subcarriers.

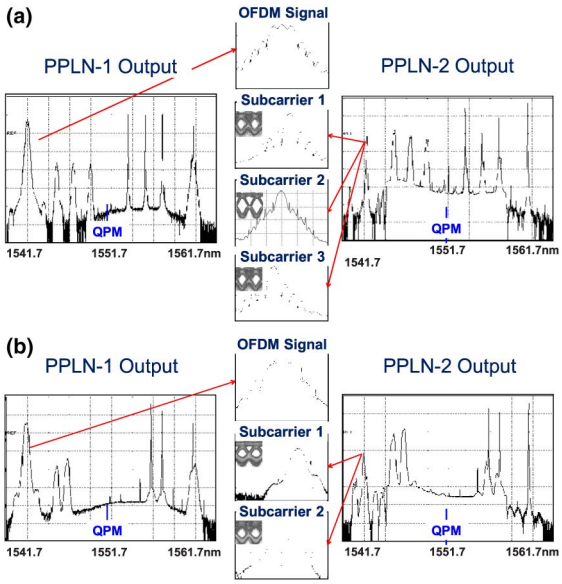

Fig. 3. (Color online) Optical spectra of serial-to-parallel stage, multiplexing stage, and extracted subcarriers along with their corresponding eye diagrams for (a) three-point DFT of OFDM with 20 GHz channel pacing and (b) two-point DFT of OFDM with 40 GHz channel spacing.

output of DFT module is sampled and measured by the SHF error detector.

Figure 3 shows demultiplexing of OFDM signal using optical DFT of length 2 and 3 with 20 and 40 GHz channel spacing, respectively. In Fig. 3(a), the input is an OFDM signal with three 20 Gb/s NRZ-DPSK subcarriers and 20 GHz frequency spacing for which the optical spectrum is shown. Optical spectra of PPLN-1 and PPLN-2 outputs are also depicted. The delay between time-domain samples needs to be ~17 ps – $1/(3 \times 20\ \text{GHz})$, which requires the wavelength spacing of ~2.4 nm between dummy pump lasers, considering ~90 m DCF. Optical spectra as well as eye diagrams of extracted subcarriers are shown too. As can be seen, open eyes are obtained for all extracted subcarriers. Figure 3(b), on the other hand, illustrates demultiplexing of OFDM with two 40 Gb/s NRZ-DPSK subcarriers and 40 GHz frequency spacing. Here, the required delay is ~12.5 ps – $1/(2 \times 40\ \text{GHz})$, and thus wavelength spacing needs to be 1.6 nm. Eye diagram and optical spectra of extracted subcarriers, and PPLN-1 output and PPLN-2 output are depicted in this figure.

Optical spectra of first and second PPLN outputs for four-point DFT with 20 GHz frequency spacing are depicted in Fig. 4(a). The delays of replicas need to be separated by ~12.5 ps – $1/(4 \times 20\ \text{GHz})$. Therefore, the wavelengths of adjacent dummy pumps should be set to ~1.6 nm separation. The optical DFT performance was assessed using bit error rate BER measurements for four-point DFT to extract four 20 Gb/s NRZ-BPSK subcarriers from an 80 Gb/s line-rate OFDM signal. The eye diagrams and BER curves are shown for stand-alone 20 Gb/s subcarriers (before encoding to OFDM) and after they are extracted from the OFDM signal in Fig. 4(b). As seen from BER curves, the power penalty of one subcarrier differs from that of another, which we believe was a result of using transmitters with different characterization in generating OFDM signal. An average power penalty of ~5 dB is

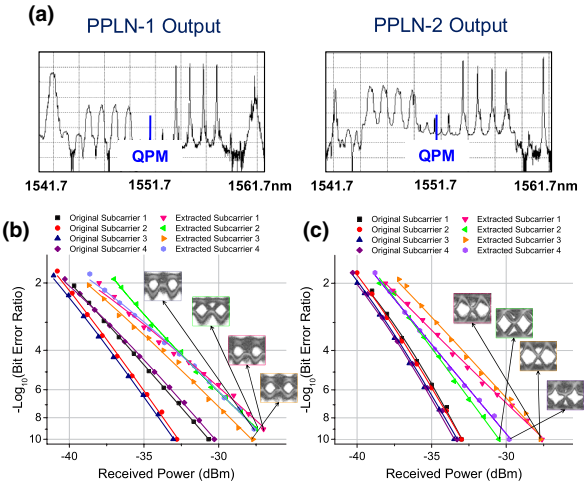

Fig. 4. (Color online) (a) Optical spectra of serial-to-parallel stage and multiplexing stage for four-point DFT of OFDM. BER measurments and eye diagram of extracted subcarriers for (b) OFDM signal with 20 GHz channel and 20 Gb/s NRZ-DPSK subcarriers and (c) OFDM signal with 20 GHz channel and 20 Gb/s NRZ-DPSK subcarriers.

achieved at BER of 10^{-9}. In Fig. 4(c), on the other hand, BER measurements for demultiplexing of OFDM with 10 Gb/s NRZ-DPSK subcarriers and 20 GHz channel spacing (i.e., Nyquist rate channels) with the same four-point DFT module are illustrated. The eye diagrams of all subcarriers are also shown. Here, the average power penalty is decreased to ~3.5 dB, which can be as a result of lower interference between OFDM subcarriers.

We acknowledge the support of Defense Advanced Research Projects Agency (DARPA) under the contracts FA8650-08-1-7820, N00014-05-1-0053, and W911NF-10-1-0151.

References

1. A. V. Oppenheim, R. W. Schafer, and J. R. Buck, *Discrete-Time Signal Processing* (Prentice Hall, 1999).
2. J. G. Proakis, *Digital Communications* (McGraw-Hill, 2000).
3. W. Shieh and I. Djordjevic, *OFDM for Optical Communications* (Academic Press, 2009).
4. H. Sanjoh, E. Yamada, and Y. Yoshikuni, in *Proceedings of Optical Fiber Communication Conference (OFC)*, ThD1 (2002).
5. K. Takiguchi, M. Oguma, T. Shibata, and H. Takahashi, Opt. Lett. **34**, 1828 (2009).
6. D. Hillerkuss, R. Schmogrow, T. Schellinger, M. Jordan, M. Winter, G. Huber, T. Vallaitis, R. Bonk, P. Kleinow, F. Frey, M. Roeger, S. Koenig, A. Ludwig, A. Marculescu, J. Li, M. Hoh, M. Dreschmann, J. Meyer, S. Ben Ezra, N. Narkiss, B. Nebendahl, F. Parmigiani, P. Petropoulos, B. Resan, A. Oehler, K. Weingarten, T. Ellermeyer, J. Lutz, M. Moeller, M. Huebner, J. Becker, C. Koos, W. Freude, and J. Leuthold, Nat. Photonics **5**, 364 (2011).
7. Z. Wang, K. S. Kravtsov, Y.-K. Huang, and P. R. Prucnal, Opt. Express **19**, 4501 (2011).
8. M. R. Chitgarha, S. Khaleghi, O. F. Yilmaz, J.-Y. Yang, and A. E. Willner, in *Proceedings of Optical Fiber Communication Conference (OFC)* OWG3 (2011).
9. C. Langrock, S. Kumar, J. E. McGeehan, A. E. Willner, and M. M. Fejer, J. Lightwave Technol. **24**, 2579 (2006).
10. Y. Wang, C. Yu, L. Yan, A. E. Willner, R. Roussev, C. Langrock, M. M. Fejer, J. E. Sharping, and A. L. Gaeta, IEEE Photon. Technol. Lett. **19**, 861 (2007).